Communication Complexity of Randomness Manipulation

Madhu Sudan
Harvard University

Joint work with Mitali Bafna (Harvard), Badih Ghazi (Google), and Noah Golowich (Harvard)

Randomness Processing Industry

- Dispersers, Extractors, Merges, Condensers, PRGs …

- Interest not in the exact function. (E=RSA most boring.)
- Rather in its manipulation of distributions …
  - Distribution of X vs. that of $E(X)$
- Long history … omitted. Key ingredients
  - single processor "E"
  - unknown source $X \in \mathcal{X}$

Distributed Randomness Processing

- 2-player setting:

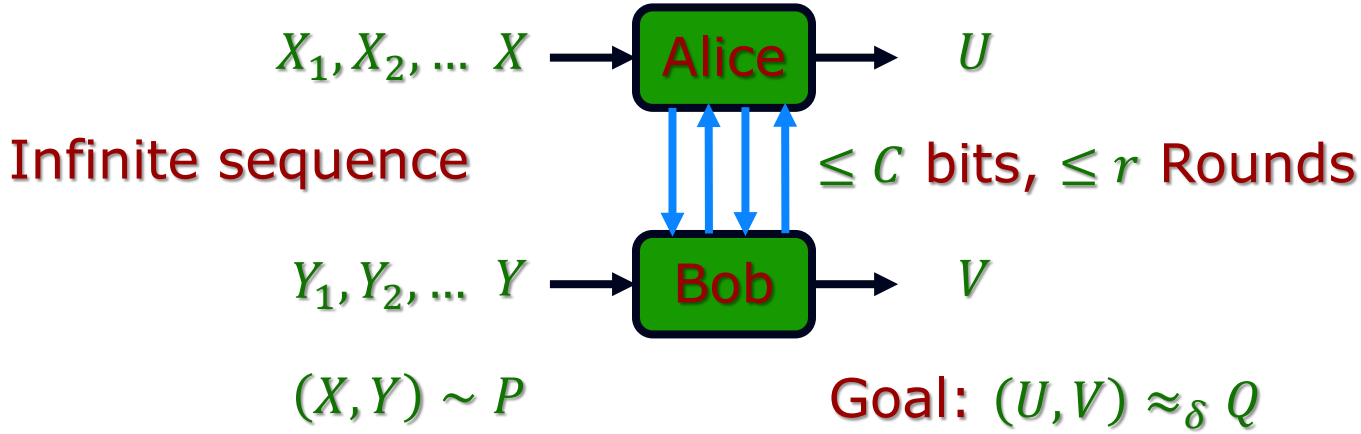

- Is $\delta = 0$ possible? If not minimize δ! Etc.
- Alice + Bob can use <u>private randomness</u>
- Zero communication version: "Non-Interactive Simulation" (NIS).

A classical example

- Zero communication
  - $(X,Y) \sim \mathrm{Unif}(\{(0,0),(0,1),(1,0)\})$
  - $(U,V) \sim \rho$-correlated bits.
    - $U,V \sim \mathrm{Unif}(\{0,1\})$, $\Pr[U=V] = \frac{(1+\rho)}{2}$
- [Witsenhausen '70s]:
  - Can't achieve $\rho = 1$. Not even $\rho = .51$
  - (Naïve strategy achieves $\rho = \frac{1}{4}$)
  - Can achieve $\rho = \frac{1}{3}$ by a general method.
  - Best ρ? Open!!

[3] This result was stated as Theorem 6.2 in [9]. However the proof given in [9] is incorrect. It hinges on a chain of inequalities of which the last actually holds in the direction opposite to the one asserted.

- Intermediate Problem: Output (A, B) w. $A, B \sim N(0,1)$ with maximum correlation.
- Definition: Max-Corr $\rho(X, Y) \triangleq \max_{f,g} \mathbb{E}_{X,Y}[f(X)g(Y)]$
  - Where $f, g: \Omega \to \mathbb{R}$,

$$\mathbb{E}_X[f(X)] = \mathbb{E}_Y[g(Y)] = 0$$
$$\mathbb{E}_X[f(X)^2] = \mathbb{E}_Y[g(Y)^2] = 1$$

- Thm 1: For (X, Y)
- Thm 2: For chieve

For Bernoulli/Gaussians
Max-Correlation = Correlation

- Thm 3: For binary (U, V), can achieve

$$1 - \frac{2 \cdot \cos^{-1}(\rho(X, Y))}{\pi} \leq \rho(U, V) \leq \rho(X, Y)$$

"Tensorization"

- "Single-letter" Problems: Given (1) structure S (graph, distribution, game) (2) product operation $S^{\otimes t}$, (3) measure M, compute $\lim_{t\to\infty} M(S^{\otimes t})$
  - Shannon capacity, Compression length, Channel capacity, parallel repetition value of 2-prover game, Direct sum complexity, NIS
- "Tensorizing bound":
  - Typically: $M(S^{\otimes t}) \geq M(S)$.
  - Find: $\mathcal{M}(\cdot)$ s.t. $M(S) \leq \mathcal{M}(S)$ and $\mathcal{M}(S^{\otimes t}) = \mathcal{M}(S)$
- Max-Correlation "Tensorizes"
  - If $(X,Y) \sim \mu$ & $(X^t,Y^t) \sim \mu^{\otimes t}$ then $\rho(X^t,Y^t) = \rho(X,Y)$
  - Proof idea: μ described by matrix P; ρ related to its singular values, $\mu^{\otimes t}$ described by $P^{\otimes t}$

Single-letter Embarassment

Problem	Base	Single-letter version
Compressibility	P	P
Channel capacity	NP	P
Independent set/Shannon capacity	NP	$[0, \infty]$
Value of 2-prover game	NP	$[\mathrm{NP}, \infty]$
Non-interactive-simulation ("correlation")	NP	$[0, CA]$
Communication Complexity	[NP,Exp?]	$[0, CA]$
?	P	$[\mathrm{NP}, \infty]$

Glossary: $0 \leq \mathrm{P} \leq NP \leq \mathrm{EXP} \leq \mathrm{Computable}$
$\leq \mathrm{CA}\ (\mathrm{Computably\ Approximable}) \leq \infty$

Complexity of NIS

- "Computably approximable"
  - [Ghazi,Kamath,S.], [De,Mossel,Neeman][2], [Ghazi,Kamath,Raghavendra]
  - There exists a finite time algorithm determining if we can get ϵ-close to (U,V) from i.i.d. samples of (X,Y)

- Idea: "Invariance Priniciple" [Mossel]
  - Either there is a method using few samples of (X,Y) or many samples $(X_1,Y_1),\ldots,(X_n,Y_n)$ each with low influence on (U,V).
  - If latter, can replace (X,Y) by finite # Gaussians.
  - Gives computable upper bound on #samples needed to get close to optimal strategy.

Communication?

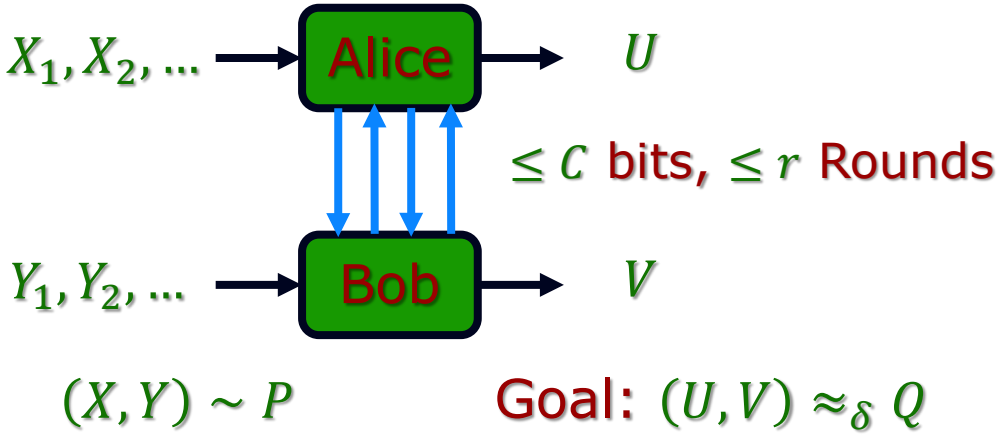

- Restrict to "Common Randomness Generation" (k-CRG): Output $(U = V)$, with $U \sim \mathrm{Unif}(\{0,1\}^k)$
- First considered ~70 [Ahlswede-Csizar]:
  - "Characterization": Can communicate $R \cdot k + o(k)$ bits, where $R = \min_{\Pi} \frac{\mathrm{IC}_{\mathrm{int}}(\Pi)}{\mathrm{IC}_{\mathrm{ext}}(\Pi)}$
  - Computable? Computably approximable?
  - For one-way communication: $R = 1 - \rho(X, Y)^2$ [Zhao-Chia] (see also [Guruswami-Radhakrishnan, Ghazi-Jayram, S.-Tyagi-Watanabe])

This talk: Rounds in CRG

- Does increasing #rounds ease CRG? (For some (X,Y)?) … Is the following true?
- Question: $\forall \epsilon > 0$, r, $\exists (X,Y)$ s.t. $\forall k$
  - $\exists$ $(r, \epsilon k)$-protocol for k-CRG(X,Y)
  - No $(r-1, (1-\epsilon).k)$-protocol for k-CRG(X,Y)
- Still don't know. Partial progress.
- Thm. [BGGS'19] : $\forall n, k, r$ there exists (X,Y) s.t.
  - $\exists$ $(r, O(r \log n)$-protocol for k-CRG(X,Y).
  - No $\left(\frac{r}{2} - 3, \min\left\{k, \frac{n}{\text{polylog}\, n}\right\}\right)$-protocol for k-CRG(X,Y)

Our Source:

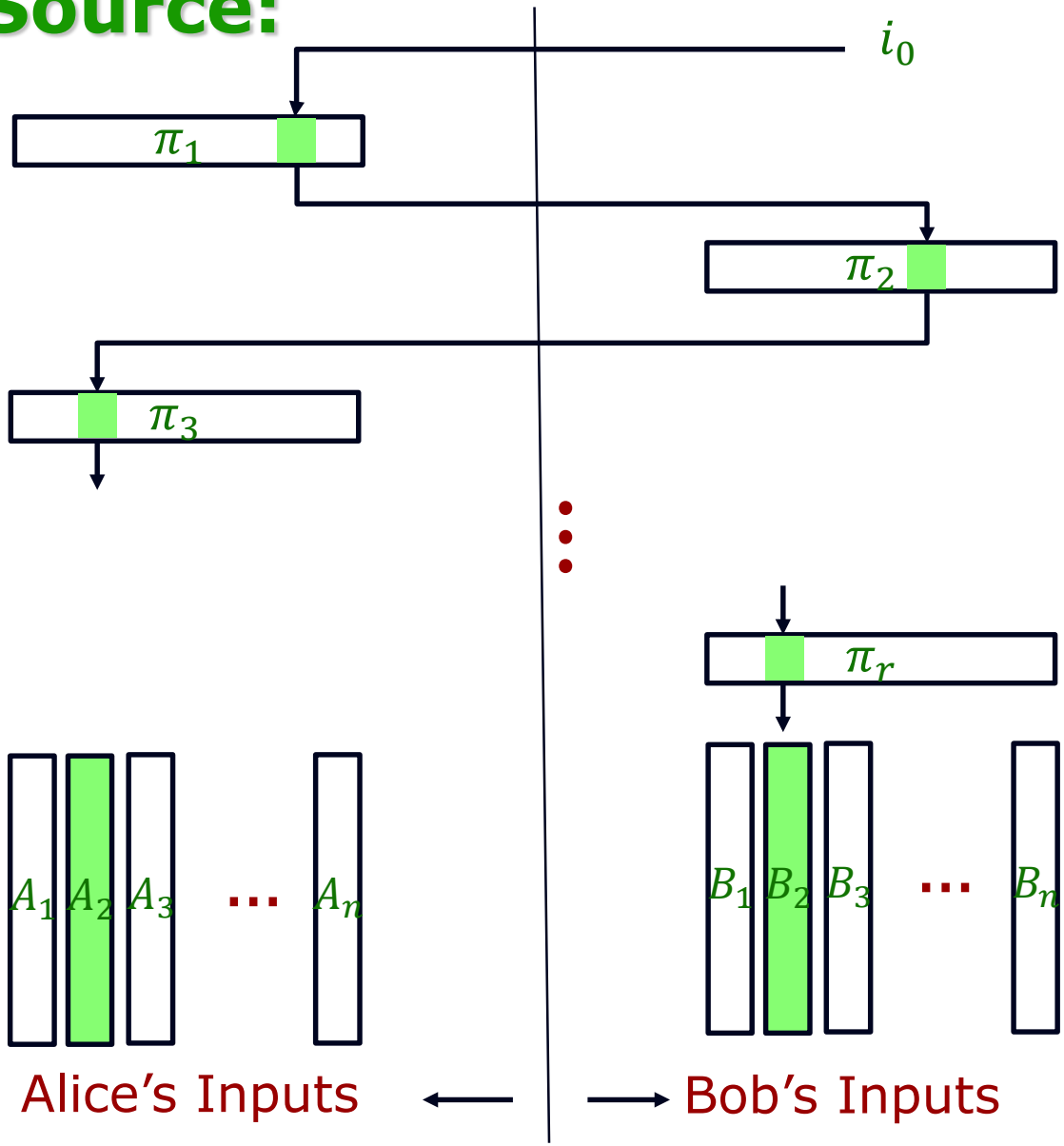

$i_0 \sim [n]$

$\pi_1, \dots, \pi_n \sim S_n$

$A_1, \dots, A_n \sim \{0,1\}^k$

$B_1, \dots, B_n \sim \{0,1\}^k$

$A_{i_r} = B_{i_r}$

where $i_j = \pi_j(i_{j-1})$

"Pointer Chasing Source" (PCS)

$X = (\pi_1, \pi_3, \dots; A_1, \dots, A_n)$

$Y = (i_0; \pi_2, \pi_4, \dots; B_1, \dots, B_n)$

CRG from Pointer Chasing Source

- Easy direction easy: $(r, r \log n)$-protocol for k-CRG
- Hardness?
  - Pointer chasing is hard: [Duris-Galil-Schnitger, Nisan-Wigderson,…].
  - CRG from PCS requires pointer chasing?
    - No! Can solve problem without pointers!
    - Small non-deterministic complexity!
    - Hardness needs to use hardness of disjointness? And of pointer-chasing?
    - How to combine modularly?

Our solution: Pointer Verification Problem

- PVP: Distinguish $(X, Y) \sim PV_{\text{YES}}$ from $(X, Y) \sim PV_{\text{No}}$
  - $PV_{\text{YES}}: X = (\pi_1, \pi_3, \ldots \pi_{r-1});\ Y = (i_0, i_r;\ \pi_2, \pi_4, \ldots \pi_r)$
  - $PV_{\text{NO}}: X = (\pi_1, \pi_3, \ldots \pi_{r-1});\ Y = (i_0, i_r'\ ;\ \pi_2, \pi_4, \ldots \pi_r)$
    - YES instance satisfy: $i_j = \pi_j(i_{j-1})$
    - NO instance: i_r' random
- Claims:
  - Hardness of (Unique) Set Disjointness ⇒ Protocol for k-CRG(PCS) solves PVP.
  - No $\left(\frac{r}{2} - O(1),\ \frac{n}{\text{polylog}\, n}\right)$-protocol for PVP.

PVP $\leq$ CRG

- Let μ_{XY} denote dist. of PCS source. μ_X, μ_Y marginals
- CRG Hard $\Leftarrow$ μ_{XY} indist. from $\mu_X \times \mu_Y$ (to $\left(\frac{r}{2}, C\right)$-protocols)
- Intermediate distribution: μ_{mid}
  - $X = (\pi_{\text{odd}}, A_1, \ldots, A_n)$; $Y = (i_0, \pi_{\text{even}}, B_1, \ldots, B_n)$, with $A_j = B_j$ for random j.
  - (Correlation exists but pointers don't point to it.)
- Claims:
  - μ_{XY} indist. from μ_{mid} $\Leftarrow$ PVP is hard
  - μ_{mid} indist. from $\mu_X \times \mu_Y$ $\Leftarrow$ (Unique) disjointness hard.

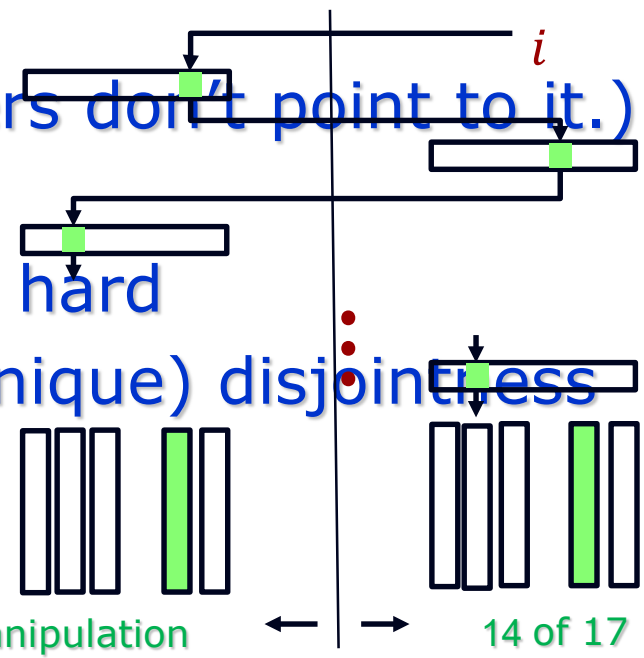

Bulk of paper: PVP is hard

- Main idea: "Round elimination" a la NW '93
  - No black-box use ☹
  - No simple variant ☹

- Induction on #rounds
  - Many invariants … roughly
    - $H(\pi_{\text{odd}}, \pi_{\text{even}} \mid \text{transcript}) \approx Max - O(C)$
    - $H(i_t \mid \text{transcript}) \approx \log n - o(1)$
    - $X \perp\!\!\!\perp Y \mid \text{path}, \text{transcript}$

Conclusions

- Many interesting problems in distributed randomness manipulation.
- Complexity of the “Single-letter characterizations”.
- Tight characterization of round complexity of CRG.

Thank You!